F4319

DOD 34319

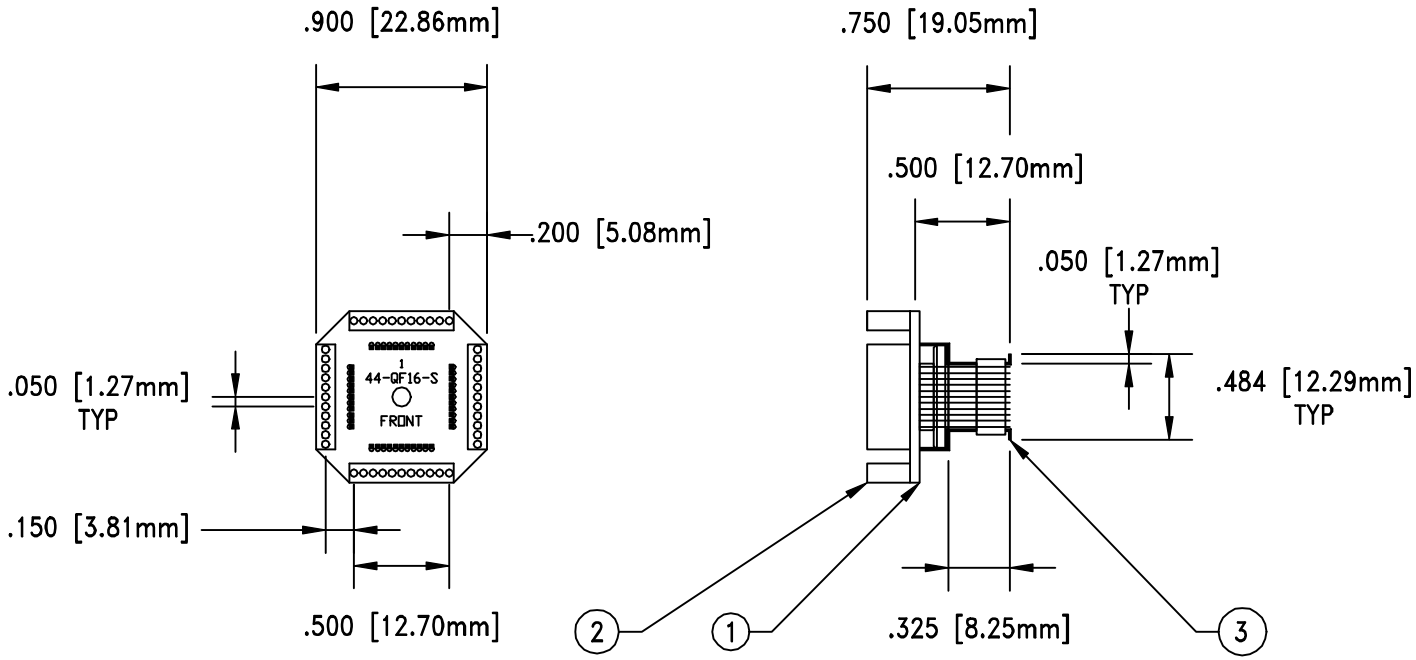

RECOMMENDED
MINIMUM PAD LAYOUT

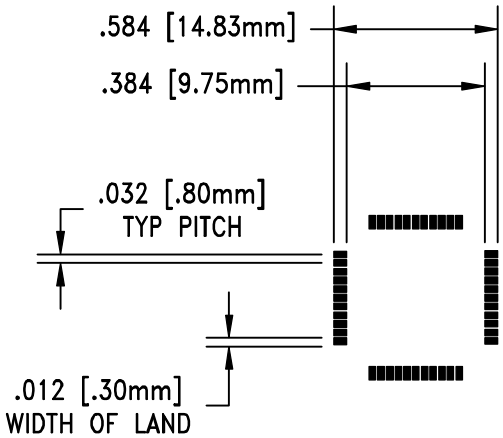

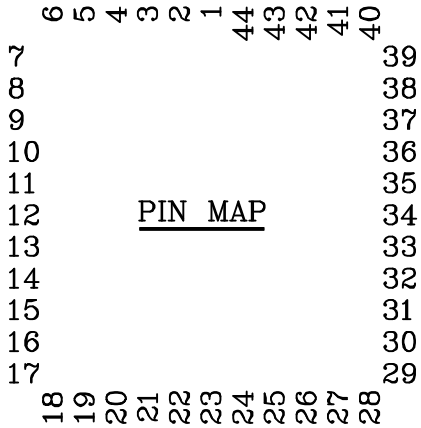

PIN MAP

NO.	ITEM	DESCRIPTION	QTY.
1	44-QF16-S	BASE BOARD	1
2	T11-FEM-50MIL	MOUNT ON FRONT OF #1	4
3	QF16D-SPACER-A	SOLDER TO REAR OF #1	1

ALL DIMENSIONS ARE IN INCHES UNLESS OTHERWISE SPECIFIED

Emulation Technology, Inc.
VLSI and SMT ADAPTERS and ACCESSORIES
2344 Walsh Avenue, Bldg. F
Santa Clara, Ca 95051
TEL:(408)982-0660
FAX:(408)982-0664

SHEET: 1 OF 1 | DATE: 10-13-00 | REVISION:

ASSEMBLY DRAWING

CHECKED: Paula Olson | DRAWN: Miguel Delgadillo

ITEM: EPP044QF16DSM

DO NOT SCALE DRAWING

DESCRIPTION: EPP-044-QF16D-SM